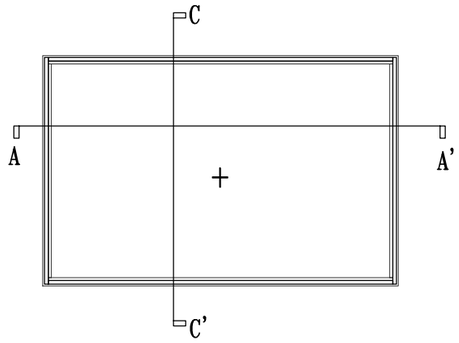

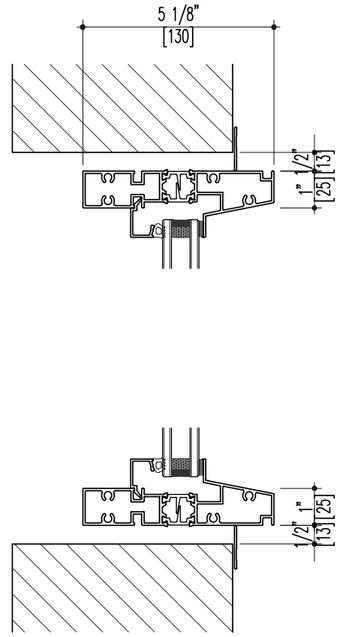

3
D.01
SECTION C-C'

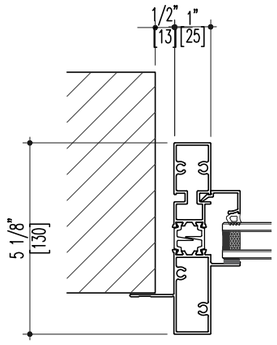

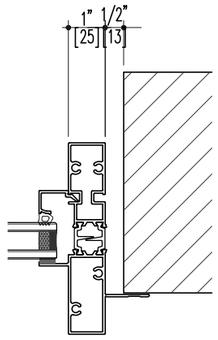

1
D.01
PLAN A-A'

WINSPIA

WINSPIA WINDOWS (CANADA) INC.
UNIT 140 - 3171 NO 6 ROAD
RICHMOND, BC, CANADA V6V 1P6
T: 604.540.1525 I www.winspia.ca

DRAWING TITLE

FW130A SERIES DETAIL (FIXED WINDOW _ NAIL PIN)

DATE

MAY 1, 2020

DRAWING NO.

STD - FW130A - 01